INSTALLATION INSTRUCTIONS FOR APHT/APHTB ACCESS PANEL

Halsey Taylor®
2222 CAMDEN COURT
OAK BROOK, IL 60521
630.574.3500
PRINTED IN U.S.A.

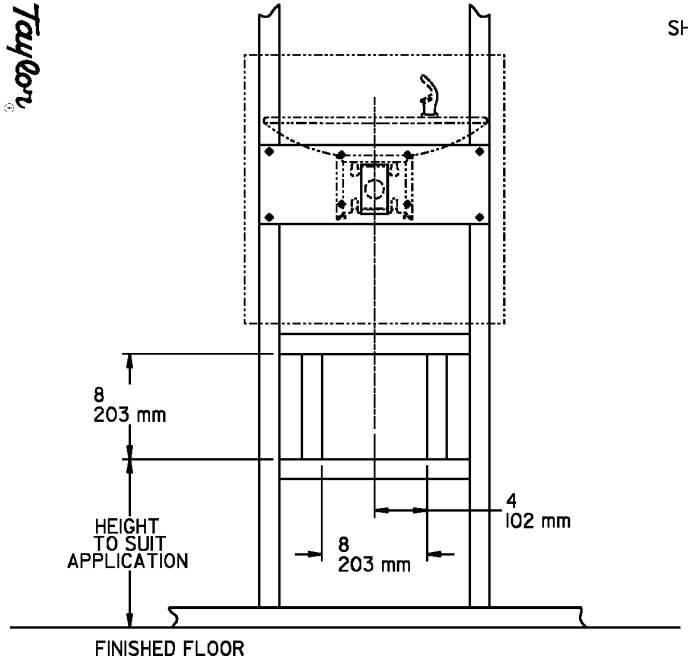

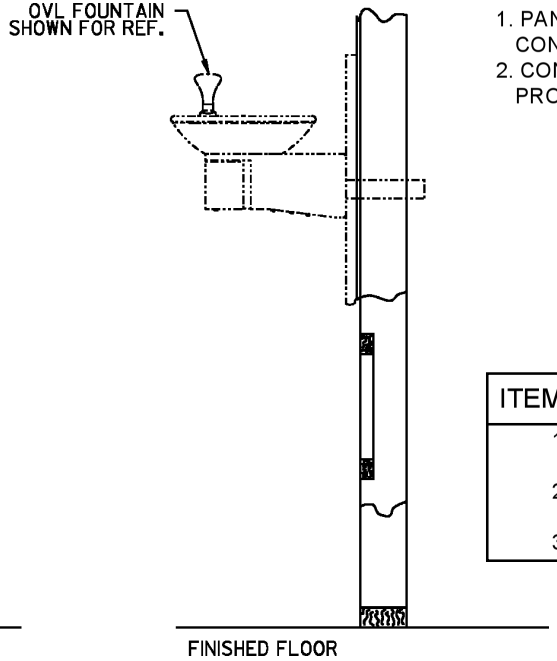

1. PANEL PROVIDES ACCESS TO PLUMBING CONNECTIONS (WATER SUPPLY & DRAIN).
2. CONNECTIONS FOR PLUMBING HOOKUP PROVIDED BY OTHERS.

PARTS LIST

ITEM NO.	PART. NO.	DESCRIPTION
1	55000966	PANEL
	27337C	PANEL-BT
2	74080057	#8-32 X 1.50 HSBH ST STEEL
	70424C	#8-32 X 1.50 HSBH-BT
3	70055C	NUT-SPEED

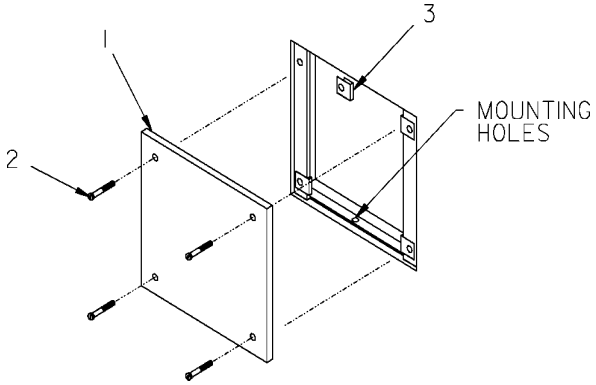

OPTIONAL ACCESS PANEL (APHT/APHTB)

1. POSITION CLIPS (4) ON FRAME'S FLANGES (FLAT SIDE OF CLIPS TO BE TOWARD FRONT).
2. PLACE ACCESS PANEL FRAME INTO 8" X 8" (203 mm x 203 mm) WALL OPENING. NOTE: POSITION WITH FLANGES ON THE LEFT AND RIGHT SIDES OF THE OPENING. FACE OF FRAME SHOULD BE FLUSH WITH OR MAXIMUM 7/8" (22 mm) BEHIND FINISHED WALL.
3. SECURE FRAME IN PLACE THROUGH MOUNTING HOLES. (FASTENERS PROVIDED BY OTHERS).
4. PLACE ACCESS PANEL OVER FRAME AND SECURE IN PLACE USING (4) HEX SOCKET SCREWS. NOTE: INSTALLATION OF THESE SCREWS WILL REQUIRE THE USE OF AN ALLEN WRENCH. (WRENCH NOT FURNISHED).

FOR PARTS, CONTACT YOUR LOCAL DISTRIBUTOR OR CALL 1.800.323.0620